Eikon: 1P 20AX 2-way switch 2M grey

20006.2

Eikon / Devices / Basic devices



1P 20AX 2-way switch 2M grey

1P 20 AX 250 V~ 2-way switch, lightable, replaceable button, grey - 2 modules. Max 250 W for self-ballasted lamps (IEC 60669-1:2017)

Product Status

3 - Active

Minimum order quantity

20 NR

Drawings

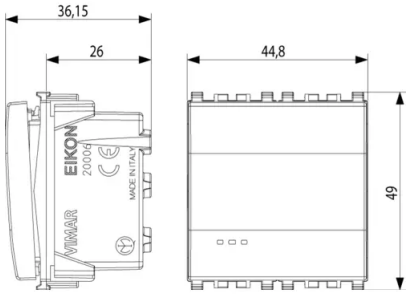

Space view

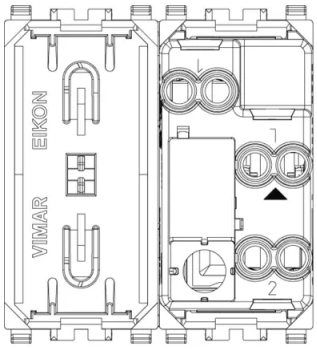

Backside view

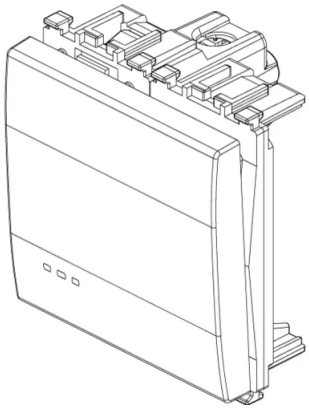

3D View

Technical data

- **Class group**: Domestic switching devices
- **Class**: Installation switch
- **Wiring system**: Two-way switch
- **Method of operation**: Rocker/button
- **Assembly arrangement**: Modular device for domestic switching devices
- **Number of modules (module system)**: 2
- **Push button switch**: Yes
- **Number of rockers**: 1
- **Mounting method**: Flush mounted (plaster)
- **Type of fastening**: Engage (snap)
- **With mounting plate**: No
- **Material**: Plastic
- **Material quality**: Thermoplastic
- **Halogen free**: Yes
- **Surface protection**: Untreated
- **Surface finishing**: Matt
- **Colour**: Grey
- **RAL-number (similar)**: 7024
- **Label space/information surface**: Yes
- **Illumination**: Optional
- **Function lighting**: Control and orientation
- **Type of lighting**: LED exchangeable
- **Suitable for degree of protection (IP)**: IP40
- **Nominal voltage**: 250 v
- **Rated current**: 20 A
- **Feedback-signal contact**: No
- **Connection type**: Screwed terminal
- **Washing machine switch**: No
- **Width of device**: 44,80 mm
- **Height of device**: 49,00 mm
- **Depth of device**: 36,10 mm
- **Built-in depth**: 25,00 mm

Certifications

- 00. CE Marking - EU
- 01. IMQ - Italy (download)
- 10. EAC Eurasian Customs Union
- 19. NOM - Mexico
- 31. TISI - Thailand
- 36. ISI - India
- 37. Marking - Morocco
- 92. RoHS UAE
- 96. Electrotechnical expert (download)
- 99. WEEE Directive (download)

Packaging

8 007352 404366

Code	8007352404366
Quantity	1 NR
Dim.	5.1x4.3x5.3 [cm]
Weight	37.4 [g]

8 007352 404373

Code	8007352404373
Quantity	20 NR
Dim.	26.9x11.6x9 [cm]
Weight	824.9 [g]

Legal

Vimar reserves the right to change at any time and without notice the characteristics of the products reported.Installation should be carried out by qualified staff in compliance with the current regulations regarding the installation of electrical equipment in the country where the products are installed.For the terms of use of the information on the product info sheet see Conditions of Use.