Net Safe: RJ45 Cat6 UTP outlet+cover grey

20337.6

Net Safe / Copper / RJ/EDP socket outlets



RJ45 Cat6 UTP outlet+cover grey

RJ45 outlet with antidust cover, Cat. 6, unshielded, T568A/B universal wiring, 8 contacts, insulation-piercing terminals, grey

Product Status

3 - Active

Minimum order quantity

20 NR

Sheets, Manuals, Documentation

- Multilanguage instructions sheet (299 kb)

Drawings

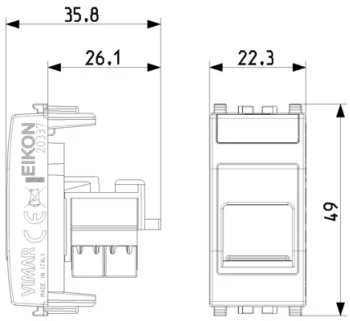

Space view

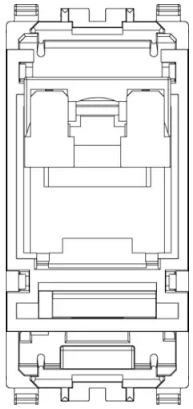

Backside view

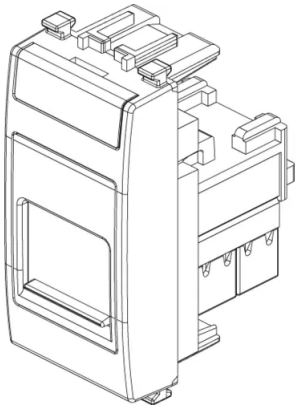

3D View

Gallery

Technical data

- **Class group**: Data and telecommunication
- **Class**: Modular connector
- **Model**: Bus (jack)
- **Type of connector**: RJ45 8(8)
- **Screened**: No
- **Category**: 6
- **Connection type**: Crimp
- **Special tool necessary**: Yes
- **Suitable for round cable**: Yes
- **Suitable for flat cable**: No
- **Suitable for litz wire conductor**: No
- **Suitable for solid core**: No
- **Colour**: Other

Certifications

- 00. CE Marking - EU
- 10. EAC Eurasian Customs Union
- 92. RoHS UAE
- 99. WEEE Directive (download)

Packaging



Code	8007352395602
Quantity	1 NR
Dim.	5.1x2.8x5.3 [cm]
Weight	21.2 [g]



Code	8007352395619
Quantity	20 NR
Dim.	27x11.6x6 [cm]
Weight	495.4 [g]



Code	8007352650244
Quantity	120 NR
Dim.	37.5x30x13.5 [cm]
Weight	3,324 [g]

Legal

Vimar reserves the right to change at any time and without notice the characteristics of the products reported.Installation should be carried out by qualified staff in compliance with the current regulations regarding the installation of electrical equipment in the country where the products are installed.For the terms of use of the information on the product info sheet see Conditions of Use.