Eikon Next: Axial 1P NO 10A push button 2M Next

20108.2.N

Eikon Next / Devices / Basic devices



Axial 1P NO 10A push button 2M Next

Axial 1P NO 10 A 250 V~ push button, lightable, replaceable button, Next - 2 modules

Product Status

3 - Active

Minimum order quantity

10 NR

You may also be interested in



00938.A - LED unit 110-250V 0,3Waxialcontrol amber



00938.G - LED unit 110-250V 0,3Waxialcontrol green



00938.R - LED unit 110-250V 0,3Waxialcontrol red



00938.B - LED unit 110-250V 0,3Waxialcontrol blue



00938.W - LED unit 110-250V 0,3Waxialcontrol white

Drawings

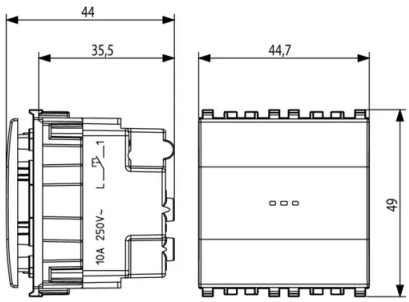

Space view

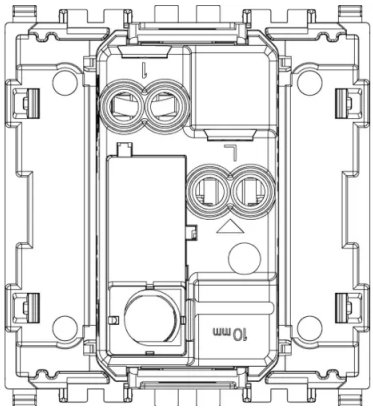

Backside view

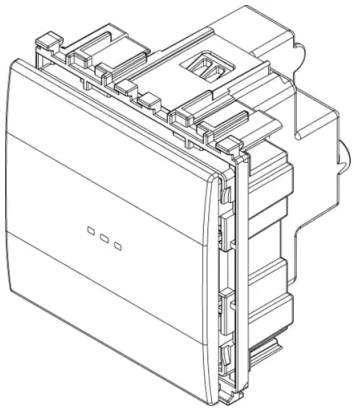

3D View

Technical data

- **Class group**: Domestic switching devices
- **Class**: Push-switch button
- **Assembly arrangement**: Modular device for domestic switching devices
- **Model**: Single push button
- **Method of operation**: Push button
- **Number of rockers**: 1
- **Number of modules (module system)**: 2
- **Number of poles**: 1
- **Nominal voltage**: 250 v
- **Rated current**: 10,00 A
- **With lighting**: Yes
- **Feedback-signal contact**: No
- **Mounting method**: Flush mounted (plaster)
- **Type of fastening**: Engage (snap)
- **Material**: Plastic
- **Material quality**: Thermoplastic
- **Halogen free**: Yes
- **Surface protection**: Lacquered
- **Surface finishing**: Matt
- **Colour**: Silver
- **RAL-number (similar)**: 9022
- **Transparent**: No
- **Label space/information surface**: Yes
- **Suitable for degree of protection (IP)**: IP40
- **Width of device**: 44,80 mm
- **Height of device**: 49,00 mm
- **Depth of device**: 44,00 mm

Certifications

- 00. CE Marking - EU
- 01. IMQ - Italy (download)
- 10. EAC Eurasian Customs Union
- 14. TSE - Turkey (download)
- 15. CCC - China (download)
- 19. NOM - Mexico
- 29. QCERT - Colombia (download)
- 31. TISI - Thailand
- 36. ISI - India
- 37. Marking - Morocco
- 92. RoHS UAE
- 96. Electrotechnical expert (download)
- 99. WEEE Directive (download)

Packaging



Code	8007352460065
Quantity	1 NR
Dim.	5.1x4.8x5.3 [cm]
Weight	40.8 [g]



Code	8007352460072
Quantity	10 NR
Dim.	24.7x11x6.2 [cm]
Weight	472 [g]

Legal

Vimar reserves the right to change at any time and without notice the characteristics of the products reported.Installation should be carried out by qualified staff in compliance with the current regulations regarding the installation of electrical equipment in the country where the products are installed.For the terms of use of the information on the product info sheet see Conditions of Use.