Net Safe: RJ45 Cat5e Netsafe UTP 110 outlet white

20339.4.B

Net Safe / Copper / RJ/EDP socket outlets



RJ45 Cat5e Netsafe UTP 110 outlet white

RJ45 outlet with Netsafe connector, Cat. 5e, unshielded, T568A/B universal wiring, 8 contacts, 110-type insulation-piercing terminals, white

Product Status

3 - Active

Minimum order quantity

10 NR

Sheets, Manuals, Documentation

- Multilanguage instructions sheet (701 kb)

Drawings

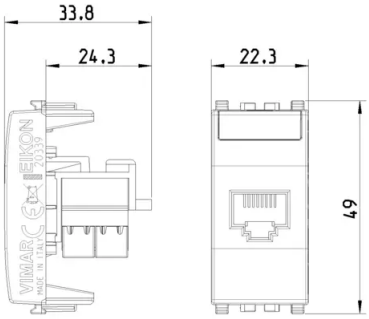

Space view

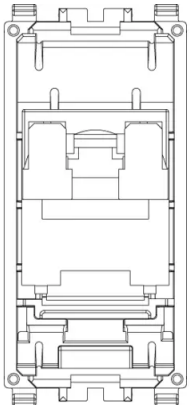

Backside view

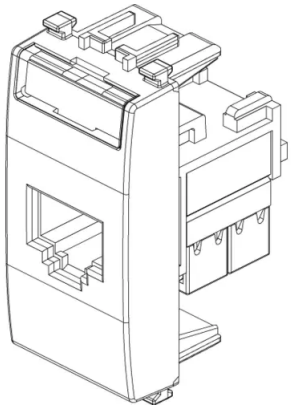

3D View

Gallery

Technical data

- **Class group**: Data and telecommunication
- **Class**: Modular connector
- **Model**: Bus (jack)
- **Type of connector**: RJ45 8(8)
- **Screened**: No
- **Category**: 5E
- **Connection type**: 110
- **Special tool necessary**: Yes
- **Suitable for round cable**: Yes
- **Suitable for flat cable**: No
- **Suitable for litz wire conductor**: No
- **Suitable for solid core**: No
- **Colour**: White
- **AWG-range**: 22 - 26

Certifications

- 00. CE Marking - EU
- 10. EAC Eurasian Customs Union
- 99. WEEE Directive (download)

Packaging

Code	8007352313835
Quantity	1 NR
Dim.	5.1x4.3x5.3 [cm]
Weight	56.67 [g]

Code	8007352313842
Quantity	10 NR
Dim.	26.9x11.6x4.9 [cm]
Weight	613.67 [g]

Code	8007352644762
Quantity	200 NR
Dim.	47.5x27x29 [cm]
Weight	12,780 [g]

Legal

Vimar reserves the right to change at any time and without notice the characteristics of the products reported.Installation should be carried out by qualified staff in compliance with the current regulations regarding the installation of electrical equipment in the country where the products are installed.For the terms of use of the information on the product info sheet see Conditions of Use.