Eikon white: Button 2M O/I symbol white

20022.99.B

Eikon white / Devices / Basic devices

Button 2M O/I symbol white

Interchangeable 2-module button, lightable O I symbols, for 2P 1-way swicth mechanism, white

Product Status

3 - Active

Minimum order quantity

2 NR

Drawings

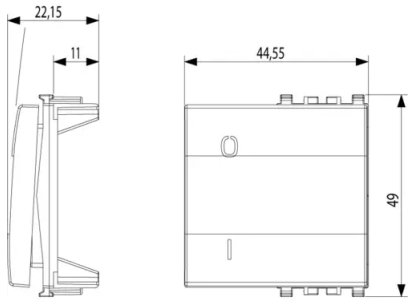

Space view

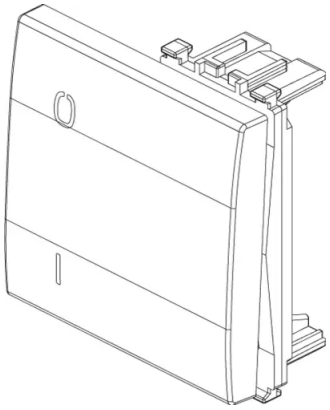

3D View

Technical data

- **Class group**: Domestic switching devices
- **Class**: Control element/cover plate for domestic switching devices
- **Model**: Single rocker
- **Imprint/indication**: Characters 0 and 1
- **Utilization**: Switch/push button
- **Suitable for touch sensor connector for bus system**: No
- **Type of fastening**: Clamp mounting
- **Monitoring window/light outlet**: Yes
- **Material**: Plastic
- **Material quality**: Thermoplastic
- **Halogen free**: Yes
- **Surface protection**: Untreated
- **Surface finishing**: Matt
- **Colour**: White
- **RAL-number (similar)**: 9016
- **With label area**: No
- **With exchangeable lens/symbol**: No
- **Suitable for degree of protection (IP)**: IP40
- **Depth**: 1.115 mm

Certifications

- 01. IMQ - Italy (download)
- 29. QCERT - Colombia (download)
- 96. Electrotechnical expert (download)

Packaging

Code	8007352316706
Quantity	1 NR
Dim.	4.46x4.9x2.29 [cm]
Weight	8.47 [g]

Code	8007352316713
Quantity	2 NR
Dim.	5.1x2.8x5.3 [cm]
Weight	20.93 [g]

Code	8007352334663
Quantity	310 NR
Dim.	28.4x24.4x19.5 [cm]
Weight	2,573 [g]

Legal

Vimar reserves the right to change at any time and without notice the characteristics of the products reported.Installation should be carried out by qualified staff in compliance with the current regulations regarding the installation of electrical equipment in the country where the products are installed.For the terms of use of the information on the product info sheet see Conditions of Use.