Arké white: Axial 1P 16AX reversing switch 2M white

19113.2.B

Arké white / Devices / Basic devices

Axial 1P 16AX reversing switch 2M white

Axial 1P 16 AX 250 V~ reversing switch, lightable, replaceable button, white - 2 modules. Max 200 W for self-ballasted lamps (IEC 60669-1:2017)

Product Status

3 - Active

Minimum order quantity

10 NR

You may also be interested in



00938.A - LED unit 110-250V 0,3Waxialcontrol amber



00938.G - LED unit 110-250V 0,3Waxialcontrol green



00938.R - LED unit 110-250V 0,3Waxialcontrol red



00938.B - LED unit 110-250V 0,3Waxialcontrol blue



00938.W - LED unit 110-250V 0,3Waxialcontrol white

Video

- Arké lives in your time

Drawings

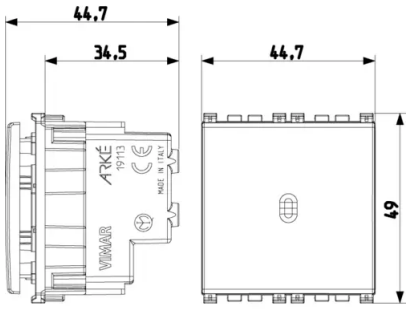

Space view

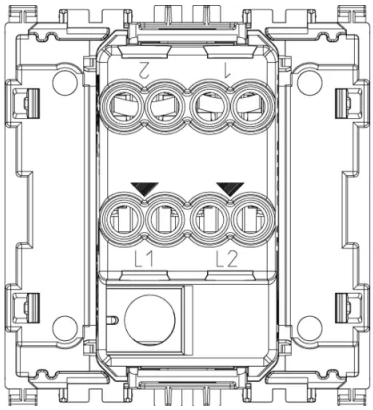

Backside view

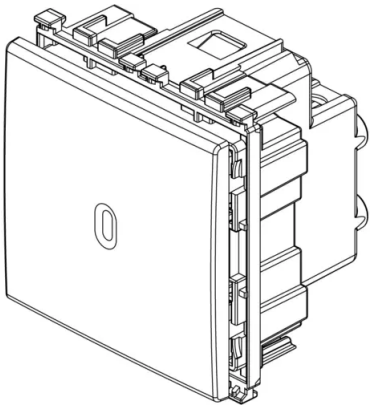

3D View

Gallery









Technical data

- **Class group**: Domestic switching devices
- **Class**: Installation switch
- **Wiring system**: Intermediate switch
- **Method of operation**: Rocker/button
- **Assembly arrangement**: Other
- **Number of modules (module system)**: 2
- **Push button switch**: Yes
- **Number of rockers**: 0
- **Mounting method**: Flush mounted (plaster)
- **Type of fastening**: Engage (snap)
- **With mounting plate**: No
- **Material**: Plastic
- **Material quality**: Thermoplastic
- **Halogen free**: Yes
- **Surface protection**: Untreated
- **Surface finishing**: Matt
- **Colour**: White
- **RAL-number (similar)**: 9016
- **Label space/information surface**: Yes
- **Illumination**: Optional
- **Function lighting**: Control and orientation
- **Type of lighting**: LED exchangeable
- **Suitable for degree of protection (IP)**: IP40
- **Nominal voltage**: 250 v
- **Rated current**: 1.600 A
- **Feedback-signal contact**: No
- **Connection type**: Screwed terminal
- **Washing machine switch**: No
- **Width of device**: 44,80 mm
- **Height of device**: 49,00 mm
- **Depth of device**: 44,70 mm
- **Built-in depth**: 34,50 mm

Certifications

- 00. CE Marking - EU
- 01. IMQ - Italy (download)
- 10. EAC Eurasian Customs Union
- 14. TSE - Turkey (download)
- 15. CCC - China (download)
- 19. NOM - Mexico
- 29. QCERT - Colombia (download)
- 31. TISI - Thailand
- 36. ISI - India
- 37. Marking - Morocco
- 92. RoHS UAE
- 96. Electrotechnical expert (download)
- 99. WEEE Directive (download)

Packaging



Code	8007352459083
Quantity	1 NR
Dim.	5.1x4.8x5.3 [cm]
Weight	49.5 [g]



Code	8007352459090
Quantity	10 NR
Dim.	24.7x11x6.2 [cm]
Weight	561 [g]

Legal

Vimar reserves the right to change at any time and without notice the characteristics of the products reported.Installation should be carried out by qualified staff in compliance with the current regulations regarding the installation of electrical equipment in the country where the products are installed.For the terms of use of the information on the product info sheet see Conditions of Use.