Net Safe: RJ45 Cat6 Netsafe FTP outlet Metal

19339.14.M

Net Safe / Copper / RJ/EDP socket outlets



RJ45 Cat6 Netsafe FTP outlet Metal

RJ45 outlet with Netsafe connector, Cat. 6, shielded, T568A/B universal wiring, 8 contacts, insulation-piercing terminals without tool use, Metal

Product Status

3 - Active

Minimum order quantity

10 NR

Sheets, Manuals, Documentation

- Multilanguage instructions sheet (642 kb)

Video

- Arké lives in your time

Drawings

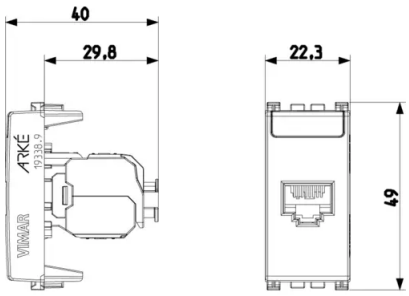

Space view

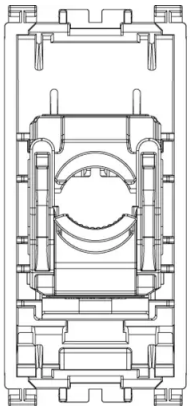

Backside view

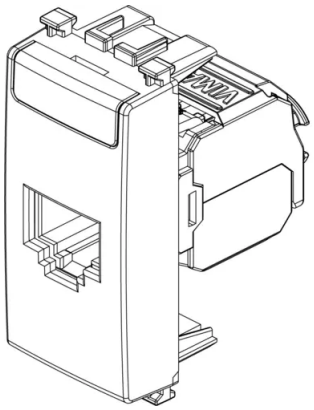

3D View

Technical data

- **Class group**: Data and telecommunication
- **Class**: Modular connector
- **Model**: Bus (jack)
- **Type of connector**: RJ45 8(8)
- **Screened**: Yes
- **Category**: 6
- **Connection type**: Crimp
- **Special tool necessary**: No
- **Suitable for round cable**: Yes
- **Suitable for flat cable**: No
- **Suitable for litz wire conductor**: No
- **Suitable for solid core**: No
- **Colour**: Other
- **AWG-range**: 23 - 26

Certifications

- 00. CE Marking - EU
- 10. EAC Eurasian Customs Union
- 24. FORCE Certificate (download)
- 99. WEEE Directive (download)

Packaging

Code	8007352597761
Quantity	1 NR
Dim.	5.1x4.3x5.3 [cm]
Weight	34 [g]

Code	8007352597778
Quantity	10 NR
Dim.	26.9x11.6x4.9 [cm]
Weight	409.7 [g]

Code	8007352648937
Quantity	200 NR
Dim.	47.5x27x29 [cm]
Weight	8,700 [g]

Legal

Vimar reserves the right to change at any time and without notice the characteristics of the products reported.Installation should be carried out by qualified staff in compliance with the current regulations regarding the installation of electrical equipment in the country where the products are installed.For the terms of use of the information on the product info sheet see Conditions of Use.