128, av. du Maréchal-de-Lattre-de-Tassigny - 87045 LIMOGES Cedex
Tél. : 0 (+33) 5 55 06 87 87 - Fax : 0 (+33) 5 55 06 88 88
www.legrand.com

Plexo™
2P+E Schuko socket outlets - With key

Cat. No(s): 0 695 74L

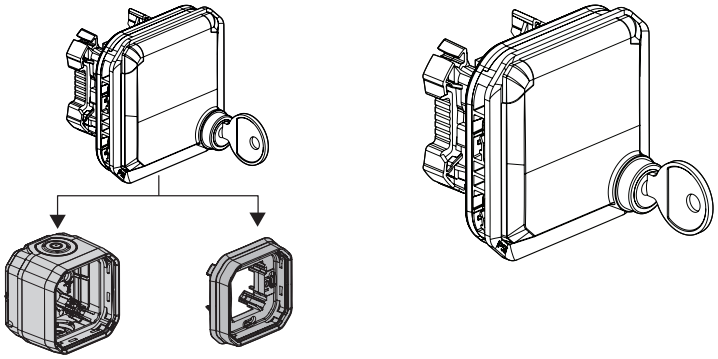

1. USE

Weatherproof wiring accessory system for residential and professional plant rooms (garages, cellars, car parks, industrial workshops and kitchens) as well as outdoor environments (terraces, gardens, camp sites, etc).
Socket outlets with protection eclips.

2. RANGE

		Reference:
Configurable		0 695 74L

3. OVERALL DIMENSIONS (mm)

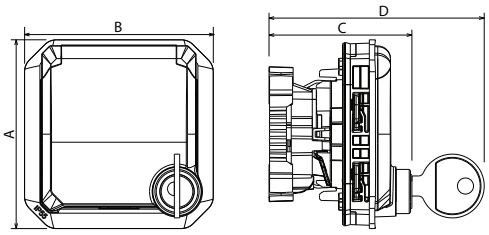

	A	B	C	D
Composable	70,5	70,5	53,4	80,4

4. CONNECTION

Type of terminals: automatic
Terminal capacity: 1.5 mm^2 - 2.5 mm^2 (1 or 2 conductors)
Stripping length: 12 mm

5. TECHNICAL CHARACTERISTICS

■ 5.1 Protection index
Protection against solid bodies and liquids: IP 55
Protection against impact: IK 08

■ 5.2 Material characteristics
Flap: ABS
Cover plate: PP + SEBS
Mechanism: PC

UV-resistant
Halogen-free
Resistance to salt spray: 7 days (168 h)

Self-extinguishing:
850°C/30 s for insulating components holding live parts in place.
650°C/30 s for other insulating components.

■ 5.3 Electrical characteristics
Voltage: 250 V~
Current: 16 A
Frequency: 50 Hz

■ 5.4 Climate characteristics
Usage temperature: - 10° à + 40° C
Storage temperature: - 25° C à + 60° C

6. CLEANING

Surface cleaning with a cloth.
Do not use: acetone, tar remover, trichloroethylene.

Maintenance with the following products: Hexane (EN 60669-1), Methylated spirit, Soapy water, Diluted ammonia, Bleach diluted to 10%, Window-cleaning products, Pre-saturated wipes.

Caution: A preliminary test should be carried out if other specific cleaning products are to be used.

7. STANDARDS AND APPROVALS

Compliance with standards of installation and manufacturing.
Refer to e. catalogue.