Floor mount turrets: Flush mounting box for floor box 3M

V54903

System infrastructure / Enclosures and control units / Floor mount turrets / Flush mounting

Flush mounting box for floor box 3M

Flush mounting box for floor box - 3 modules

Product Status

3 - Active

Minimum order quantity

1 NR

Sheets, Manuals, Documentation

- Multilanguage instructions sheet (121 kb)

Gallery

Drawings

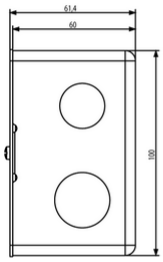

Space view

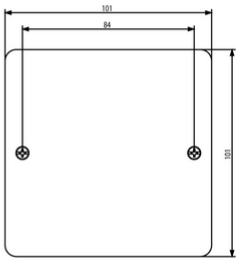

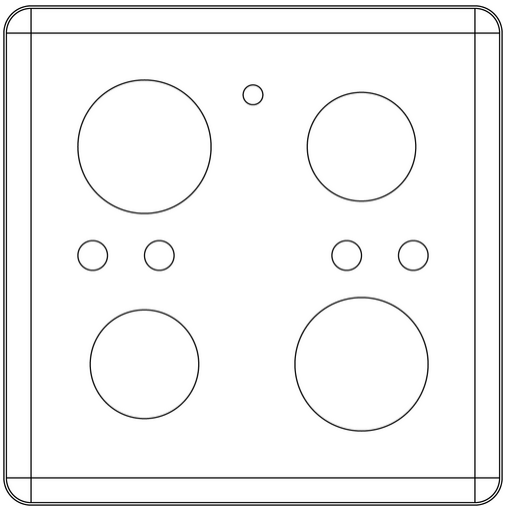

Backside view

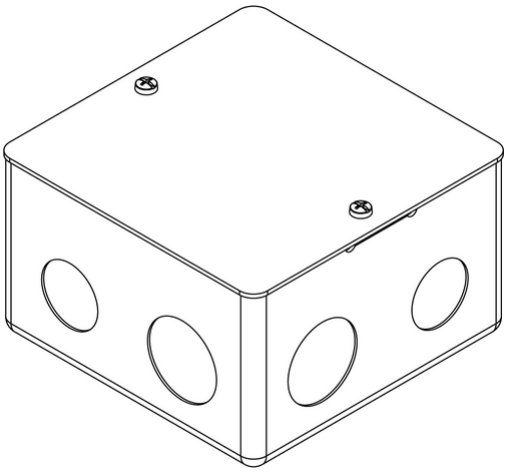

3D View

Certifications

- **00. CE Marking - EU**

Technical data

Class group: Civil infrastructure

Class: Underground box

Application: Energy technology

Colour: Other

Housing material: Steel

Material cover: Plastic

Shape: Square

Length: 101 mm

Width: 101 mm

Overall depth: 61,40 mm

Ground cover: 61 mm

Max. load: 100 kg

With ventilation slots: No

Packaging

8007352594708

Qtà	1 NR
Dim	13.4x13.4x7 [cm]
Weight	332 [g]

8007352594715

Qtà	16 NR
Dim	30.5x26.5x27.5 [cm]
Weight	5,836 [g]

You may also be interested in

V54303 - Floor turret 3M Plana Neve

Legal

Vimar reserves the right to change at any time and without notice the characteristics of the products reported.Installation should be carried out by qualified staff in compliance with the current regulations regarding the installation of electrical equipment in the country where the products are installed.For the terms of use of the information on the product info sheet see Conditions of Use.