EIKON: 2P+E 16A DE SICURY outlet +USBC 15 Next

20208.USB.N

Wiring devices / Traditional wiring devices / EIKON / Devices

2P+E 16A DE SICURY outlet +USBC 15 Next

Product Status

3 - Active

Minimum order quantity

10 NR

Drawings

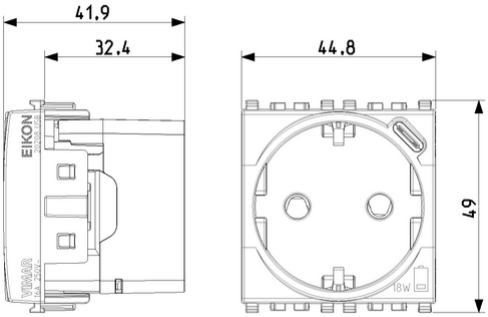

Space view

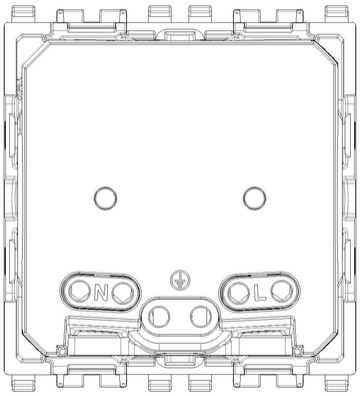

Backside view

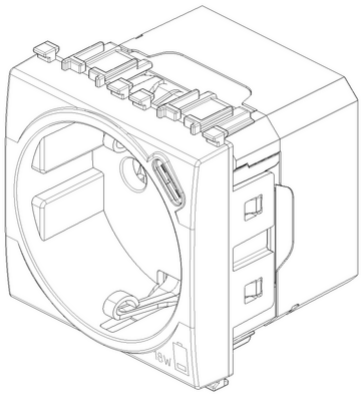

3D View

Certifications

- **00. CE Marking - EU**
- **37. Marking - Morocco**
- **99. WEEE Directive (download)**

Technical data

Class group: Domestic switching devices

Class: Socket outlet

Model: Socket outlet with protective contact CEE 7/3 (type F)

Concurrently switching neutral conductor: No

Protective contact: Earthing clips

Number of active contacts (round): 2

Number of active contacts (flat): 0

Number of active contacts (square): 0

With signal lamp: No

Number of ports USB-A: 0

Number of ports USB-C: 1

Max. current rating of USB power supply: 3 A

Number of socket outlets: 1

Number of modules (module system): 2

Number of socket outlets switchable: 0

Number of phases: 1

Imprint/indication: Other

Connection type: Screwed terminal

With hinged lid: No

With enhanced contact protection: Yes

Label space/information surface: No

Colour: Silver

RAL-number (similar): 9022

Metallic colour: No

Transparent: No

Lockable: No

Eject-mechanism: No

Insulated mounting: Yes

With function lighting: No

With orientation lighting: No

Overvoltage protection: No

Fault current protection: No

With miniature fuse: No

Special power supply: None

Mounting method: Flush-mounted

Type of fastening: Snap mounting (engagement)

Material: Plastic

Material quality: Thermoplastic

Halogen free: Yes

Surface protection: Lacquered

Surface finishing: Matt

Anti-bacterial treatment: No

With loop through function: Yes

Number of loop throughs: 1

With on/off switch: No

Colour of switch operator: Other

Rotated central insert: No

Nominal current: 16 A

Nominal voltage: 250 V

Frequency: 50,00 - 60,00 HZ

Rated fault current: 0 mA

Suitable for degree of protection (IP): IP20

Impact strength: Other

Device width: 44,70 mm

Device height: 49,00 mm

Device depth: 41,80 mm

Min. depth of built-in installation box: 40,00 mm

Compatible with Apple HomeKit: No

Compatible with Amazon Alexa: No

Compatible with Google Assistant: No

IFTTT support available: No

With Wi-Fi signal repeater: No

With built-in bluetooth speaker: No

For heavy conditions according to VDE: No

Compliant with UK Building Regulations Part M: No

Packaging

8007352754843	8007352754850	8007352754867
Qtà 1 NR	**Qtà** 10 NR	**Qtà** 120 NR
Dim 6x5.4x5.2 [cm]	**Dim** 28.1x13.1x6 [cm]	**Dim** 38.5x29x30 [cm]
Weight 48.07 [g]	**Weight** 541.6 [g]	**Weight** 6,499 [g]

Legal

Vimar reserves the right to change at any time and without notice the characteristics of the products reported.Installation should be carried out by qualified staff in compliance with the current regulations regarding the installation of electrical equipment in the country where the products are installed.For the terms of use of the information on the product info sheet see Conditions of Use.