OPPLE LIGHTING.

Downlight Compact EcoMax G2

- Stylish and compact LED downlight
- Sturdy full metal housing
- Integrated driver for easier installation
- High efficacy up to 140 lm/W
- IP54 on light emitting side, Full IP54 versions available
- Full range: 4 sizes with Multi Power
- Versions with PIR sensor available
- 3000K/4000K CCT Switch for non-IP 54 versions
- Quick wiring solution (junction box)

Specifications

Item Code	Item Description	Equivalent to (W)	Power (W)	Lumen (lm)	Efficacy (lm/W)	CCT (K)	Net Weight (kg/pc)
On-Off							
540001533000	LEDDownlightCo-E2 Rd125-6/12W-830/840	CFL 1x18W	6 - 12	720 - 1440	120	3000 - 4000	0.15

Accessories

140060650
LEDDownlightRc-HZdim-Adapter-125-150

Packaging information

Item			Box			
Item Code	Item Description	EU HS Code	Dimensions (mm) (LxWxH)	Gross Weight (kg/pc)	EAN	pc/box
540001533000	LEDDownlightCo-E2 Rd125-6/12W-830/840	94051190	165x165x45	0.20	6937209669483	1
140060650	LEDDownlightRc-HZdim-Adapter-125-150	94059900	180x180x20	0.15	6956321894160	1

Technical Specifications	
Lifetime (L70)	70,000 h
Lifetime (L80)	50,000 h
On-/Off-cycles	100,000
Colour consistency (SDCM)	4
Dimmability	On-Off
Beam angle	100 °
Finishing	White RAL9003
RAL-Number	9003
Colour rendering index (CRI)	> 80
Ingress protection front side (IP)	IP54
Ingress protection recessed part (IP)	IP20
Impact strength (IK)	IK03
Protection class	II
Risk group (EN 62471)	RG0
With control gear	True
Glow wire test	650 °C
Driver failure rate (at 5,000 hrs)	≤ 1 %

Electrical Supply	
Frequency	50 - 60
Nominal voltage	220 - 240 V
DC input voltage	No

Mechanical Properties	
Housing material	Aluminium
Optical material	PC

Ambient Conditions	
Operating temperature	-10 ~ 45 °C
Application temperature	25 °C
Storage environment	-25 ~ 50 °C

Dimensional Drawing (mm)

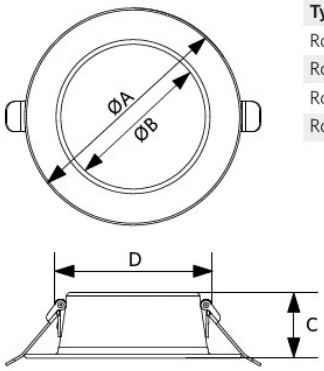

Type	A	B	C	D
Rd100	115	77	35	83
Rd125	140	102	35	108
Rd150	170	132	35	137
Rd200	220	181	35	187
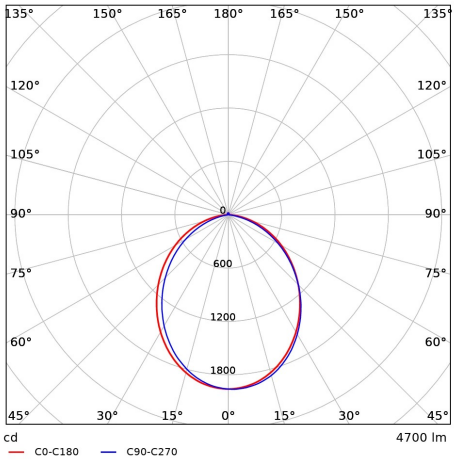
Photometric Data