OPPLE LIGHTING.

Sensors

- Compact sensor range with Relay (230V) , DALI-2 Broadcast, DALI-2 input and Smart BLE2 versions
- Large detection area of up to Ø 28m for the asymetric corridor versions
- Adjustable sensitivity or daylight treshhold via rotary switches or remote controller
- Compatible with the Opple Smart Lighting system (DALI input/BLE2 versions)
- Surface mounting accessory available

Specifications

Item Code	Item Description	Net Weight (kg/pc)	Sensor Range
DALI2			
822001001300	SmartSensor-DALI2-MasterBr-PIR-L-ASY	0.1	28

Packaging information

Item			Box			
Item Code	Item Description	EU HS Code	Dimensions (mm) (LxWxH)	Gross Weight (kg/pc)	EAN	pc/box
822001001300	SmartSensor-DALI2-MasterBr-PIR-L-ASY	85365005	95x95x105	0.04	6937209626974	1
822001002000	SmartSensor-Remote-Controller	85269200	100x50x22	0.02	6937209627049	1
822001002100	SmartSensor-Surface-Module-D68	85269200	72x72x92	0.26	6937209627056	1
822001002200	SmartSensor-Surface-Module-D84	85269200	87x87x92	0.32	6937209627063	1

Technical Specifications	
Ingress Protection (IP)	IP20
Impact strength (IK)	IK04
Finishing	White RAL9003
Communication	DALI2
Detection diameter	Max Ø 28m
Detection angle	360 °
Switch-off delay time	5 - 1,800 s
Daylight balance	True

Electrical Supply	
Max. switching power	0.11 W
Nominal voltage	220 - 240 V
Frequency	50 - 60 Hz

Mechanical Properties	
Material	PC

Ambient Conditions	
Operating temperature	-30 - 50

WARRANTY 5 YEARS

Version September 2026
Data subject to change

Dimensional Drawing (mm)

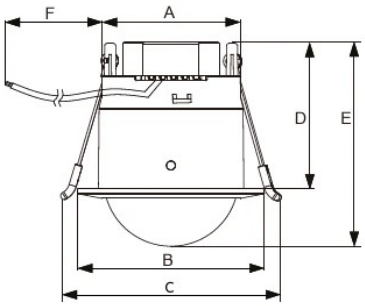

Type	A	B	C	D	E	F
ASY	68	84	106	70	92	750

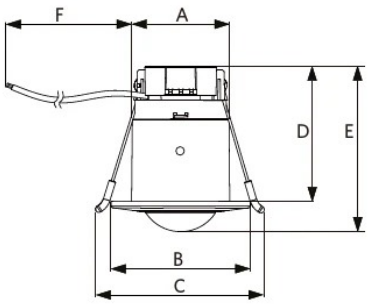

Type	A	B	C	D	E	F
RND	48	68	88	68	83	750

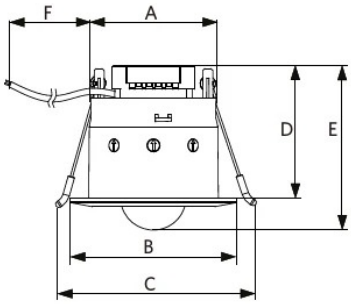

Type	A	B	C	D	E	F
RND DALI Master	68	84	106	70	86	750

Installation Opening Drawing (mm)

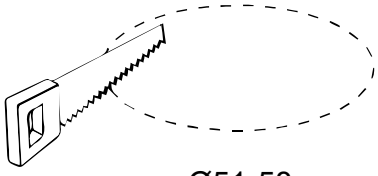

Ø51-58

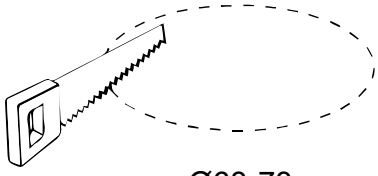

Ø68-73