EIKON: Speaker connector grey

20583

Wiring devices / Traditional wiring devices / EIKON / Devices



Speaker connector grey

Spring connector for speaker, grey

Product Status

3 - Active

Minimum order quantity

1 NR

Sheets, Manuals, Documentation

- Sound System technical catlogue - IT (32460 kb)
- Multilanguage instructions sheet (608 kb)

Drawings

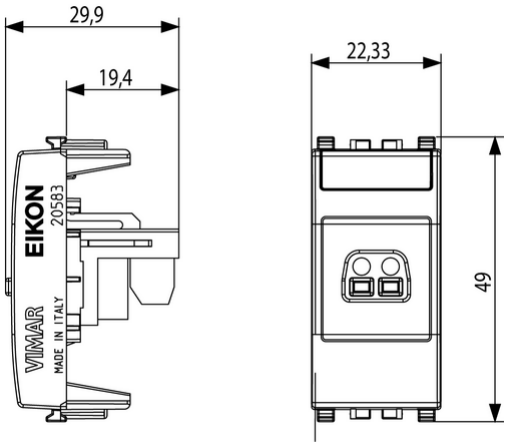

Space view

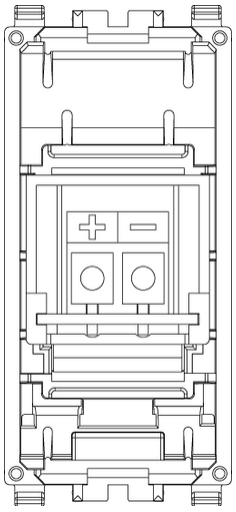

Backside view

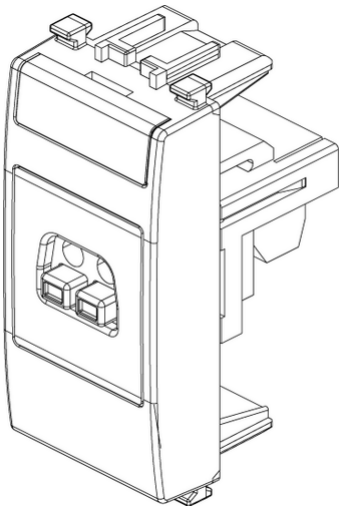

3D View

Certifications

- **00. CE Marking - EU**
- **96. Electrotechnical expert (download)**
- **99. WEEE Directive (download)**

Technical data

Class group: Domestic switching devices

Class: Insert/cover for communication technology

Assembly arrangement: Modular device for domestic switching devices

Utilization: Other

Support ring: No

With dust cover: No

With hinged lid: No

With imprint: Yes

Mounting method: Flush-mounted

Material: Plastic

Material quality: Thermoplastic

Halogen free: Yes

Surface protection: Untreated

Surface finishing: Matt

Colour: Grey

RAL-number (similar): 7024

Transparent: No

Type of fastening: Engage (snap)

Number of modules (module system): 1

With strain relief: No

Luster terminal: No

Suitable for degree of protection (IP): IP20

Device width: 22,30 mm

Device height: 49,00 mm

Device depth: 29,90 mm

Packaging



8007352400627

Qtà	1 NR
Dim	5.1x4.3x5.3 [cm]
Weight	20.35 [g]



8007352400634

Qtà	10 NR
Dim	26.9x11.6x4.9 [cm]
Weight	270.07 [g]



8007352648296

Qtà	200 NR
Dim	47.5x27x29 [cm]
Weight	5,920 [g]

Legal

Vimar reserves the right to change at any time and without notice the characteristics of the products reported.Installation should be carried out by qualified staff in compliance with the current regulations regarding the installation of electrical equipment in the country where the products are installed.For the terms of use of the information on the product info sheet see Conditions of Use.